BRISTAN
TAPS & SHOWERS

Installation Instructions & User Guide

Please leave these instructions with the end user

Product code: GWF BF C (D1)

Specifications

Dynamic Water Pressure

Min: 0.1bar **Max: 5.0bar**

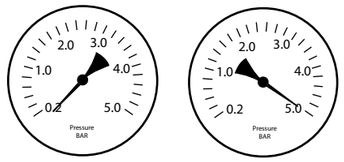

Maximum Static Pressure: 10.0bar

Inlet water temperature

Cold Water Supply **Hot Water Supply**

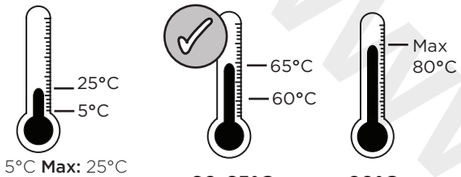

Min: 5°C **Max:** 25°C

60-65°C Recommended **80°C Maximum**

Inlet Dimensions

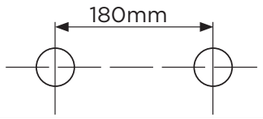

Inlet Connection

3/4" Male BSP Tap Connector

Tools you'll need

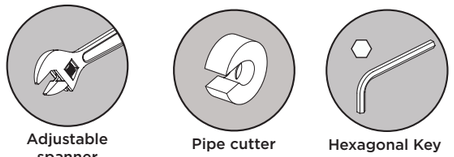

Adjustable spanner **Pipe cutter** **Hexagonal Key**

Installation

1

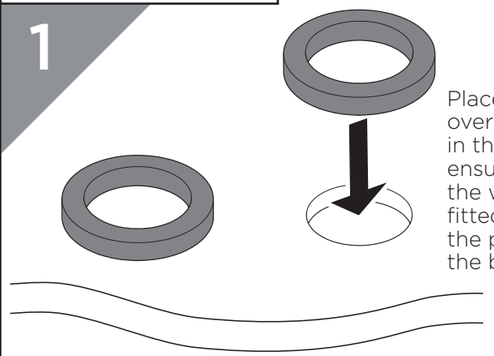

Place the plinths over the holes in the bath ensuring that the washers are fitted between the plinths and the bath.

2

Fit the body to the bath.

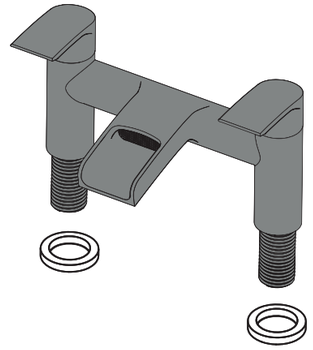

3

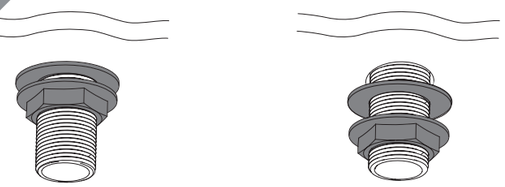

Secure the body to the bath by using the washer and metal back nut below the bath. Tighten the back nut onto the threaded tails.

4

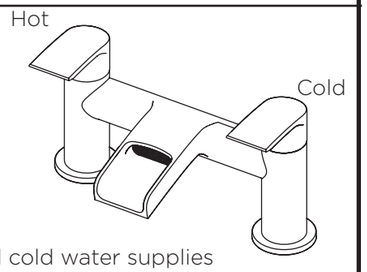

Connect the hot and cold water supplies to the threaded tails using ¾" BSP connector (not supplied). Turn on the mains water supply letting the water flow for a few minutes to flush through the system. Check all joints and connections for any leaks.

Prior to Installation

All products manufactured and supplied by Bristan are safe provided they are installed, used correctly and receive regular maintenance in accordance with this instruction.

This product needs to be installed in accordance with, and meet the requirements of the Water Supply (Water Fittings) Regulations 1999 and Scottish Bye-laws 2004.

For product specific installation requirements, please visit www.wras.co.uk

Isolation valves must be fitted to the inlet water supplies to ensure ease of future maintenance.

Before installing this product the water supply must be thoroughly flushed in order to remove any swarf, solder etc.

This product must not be modified in any way as this will invalidate the guarantee.

Full access must be made available for future maintenance / servicing purposes.

If in doubt, contact a registered plumber or your Local Water Authority or the Secretary of the Institute of Plumbing, address as follows;-

The Institute of Plumbing,
64 Station Lane,
Hornchurch,
Essex,
RM12 6NB, Tel: 01708 472791

Pack Contents

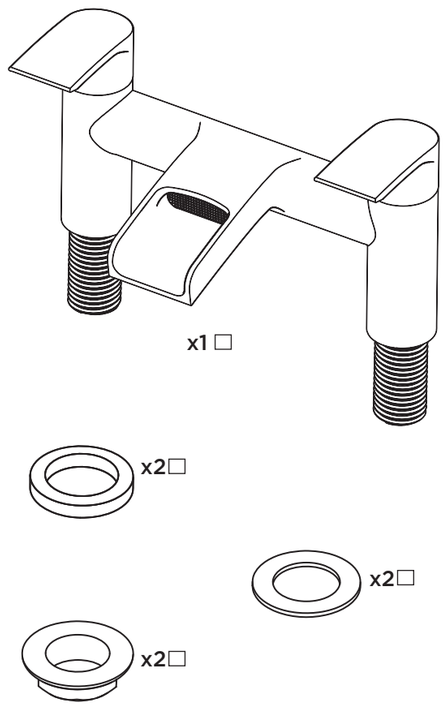

Operation

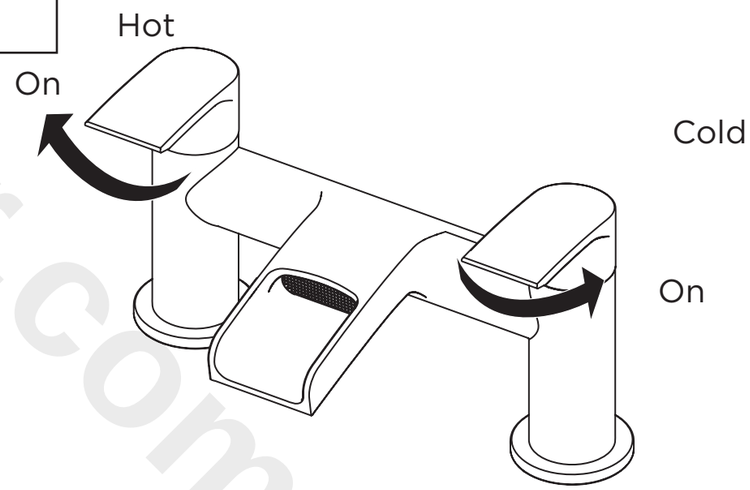

Why not visit our YouTube channel

To see our latest how-to videos, simply scan the QR code with your smart phone or tablet.

Alternatively visit www.youtube.com/bristantv

www.diyapor.com

Maintenance - Valve Cleaning

1

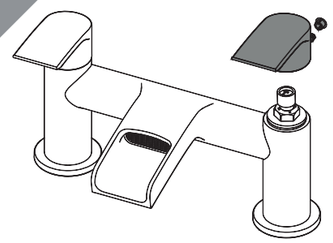

Remove the cap and loosen the grub screw. Remove the handle.

2

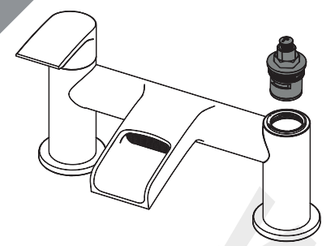

Remove any O-rings, soak the valve in de-scaler and wash off in clean water. Examine all seals and replace if needed. Use WRAS approved silicon based grease on all seals.

3

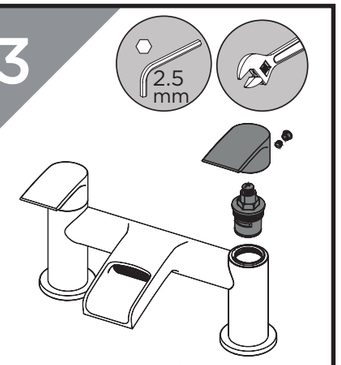

Replace the valve into the body and tighten in a position. Replace the handle, tighten the grub screw and push fit the cap.

General Cleaning

Your fitting has a high quality finish and should be treated with care to preserve the visible surfaces.

All surfaces will wear if not cleaned correctly, the only safe way to clean your mixer tap is to wipe with a soft damp cloth. Stains can be removed using washing up liquid. All bath cleaning powders and liquids will damage the surface of your fitting, even the non-scratch cleaners.

Note: Never use abrasive detergents or disinfectants or those containing alcohol, hydrochloric acid or phosphoric acid.

Spare Parts

To replace any spare parts for your bath shower mixer why not scan the QR code and search for your product

Troubleshooting

Symptom	Cause	Remedy
No flow or low flow rate	Partially closed isolation valve.	Open isolation valve.
	Instantaneous water heater cycles on and off as flow rate or pressure is too low.	Increase water flow rate or pressure through system.
	Head of water is below the minimum distance required.	2 meters minimum required.
	Hot or cold water being drawn off elsewhere causing pressure changes or instantaneous boiler temperature changes.	Do not use other water outlets when using the taps.
	Air lock or partial blockage in the supply pipe work.	Flush through pipe work to ensure removal of debris and any air locks.
Water dripping from taps	This is normal for a short time after using the taps.	This is caused by capillary action, the build up of water in the tap body.
	If water continues to drip, possibly due to the ceramic disc valves	Remove valves and clean, refer to 'Maintenance' section before starting any maintenance.
Taps do not turn on	Closed isolation valve.	Open isolation valve.
	Mains water supply turned off.	Turn on mains water supply.

Notes

Please use this space for any notes you or your installer may have regarding the installation of this product.

At Bristan, we want to make things as easy as possible for our customers. That's why we offer solid guarantees on all our products, effective from the date of purchase, to give you peace of mind.

To start your free **guarantee** simply scan the QR code and register your product, alternatively visit **www.bristan.com/register**.

For any other queries, please call our Customer Service on 03300266273 where our expert team of advisors will be able to offer you any help and advice. For full guarantee terms and conditions visit **www.bristan.com/guarantees.**

We Know & We Care

www.diyVapor.com